SERIES SH5400 NON-IMPACT RESISTANT, VINYL SINGLE HUNG WINDOW

FLORIDA PRODUCT APPROVAL #1435

IMPACT RATING
NOT RATED FOR IMPACT RESISTANCE

DESIGN PRESSURE RATING
SEE TABLE 1

1) THIS PRODUCT HAS BEEN DESIGNED & TESTED TO COMPLY WITH THE REQUIREMENTS OF THE CURRENT FLORIDA BUILDING CODE.

2) SHUTTERS ARE REQUIRED WHEN USED IN WIND-BORNE DEBRIS REGIONS.

3) MASONRY ANCHORS MAY BE USED INTO WOOD AS PER TABLES 2&3. ALL WOOD BUCKS LESS THAN 1-1/2" THICK ARE TO BE CONSIDERED 1X INSTALLATIONS. 1X WOOD BUCKS ARE OPTIONAL IF UNIT IS INSTALLED DIRECTLY TO SUBSTRATE. WOOD BUCKS DEPICTED AS 2X ARE 1-1/2" THICK OR GREATER. 1X AND 2X BUCKS (WHEN USED) SHALL BE DESIGNED TO PROPERLY TRANSFER LOADS TO THE STRUCTURE. WOOD BUCK DESIGN AND INSTALLATION IS THE RESPONSIBILITY OF THE ENGINEER OR ARCHITECT OF RECORD.

4) ANCHOR EMBEDMENT TO BASE MATERIAL SHALL BE BEYOND WALL DRESSING OR STUCCO. USE ANCHORS OF SUFFICIENT LENGTH. ANCHORS AND FRAME CORNERS SHOULD BE SEALED. OVERALL SEALING/FLASHING STRATEGY FOR WATER RESISTANCE OF INSTALLATION SHALL BE DONE BY OTHERS AND IS BEYOND THE SCOPE OF THESE INSTRUCTIONS.

5) SHIMS ARE REQUIRED AT EACH ANCHOR LOCATION WHERE THE PRODUCT IS NOT FLUSH TO THE SUBSTRATE. USE SHIMS CAPABLE OF TRANSFERRING APPLIED LOADS. WOOD BUCKS, BY OTHERS, MUST BE SUFFICIENTLY ANCHORED TO RESIST LOADS IMPOSED ON THEM BY THE WINDOW.

6) THE ANCHORAGE METHODS SHOWN HAVE BEEN DESIGNED TO RESIST THE WIND LOADS CORRESPONDING TO THE REQUIRED DESIGN PRESSURE. THE 33-1/3% STRESS INCREASE HAS NOT BEEN USED IN THE DESIGN OF THIS PRODUCT. THE 1.6 LOAD DURATION FACTOR WAS USED FOR THE EVALUATION OF ANCHORS INTO WOOD. ANCHORS THAT COME INTO CONTACT WITH OTHER DISSIMILAR MATERIALS SHALL MEET THE REQUIREMENTS OF THE FLORIDA BUILDING CODE FOR CORROSION RESISTANCE.

7) FRAME FLANGES OR INTEGRAL FINS MAY BE TRIMMED IN-FIELD TO CREATE EQUAL-LEG FRAME.

TABLE 1:

Window Buck Size		Configuration	Reinf. Level	Design Pressure		Product Rating
Width	Height			(+) psf	(-) psf	
40"	63"	Equal-lite	R4	50.0	70.0	R-PG50
36"	62"	Std. ProView	R4	50.0	50.0	LC-PG50
36"	67-9/16"	Custom Sash				
52-1/8"	84"	Equal-lite	R1	50.0	50.0	LC-PG50
52-1/8"	84"	Std. ProView				
52-1/8"	91-13/16"	Custom Sash				
52-1/8"	84"	Equal-lite	R2	65.0	70.0	LC-PG65
52-1/8"	84"	Std. ProView				
52-1/8"	91-13/16"	Custom Sash				

MIN. SASH HEIGHT = WINDOW BUCK HEIGHT - 50.136 (APPLIES TO ANY HEIGHT 91.78" OR LESS).

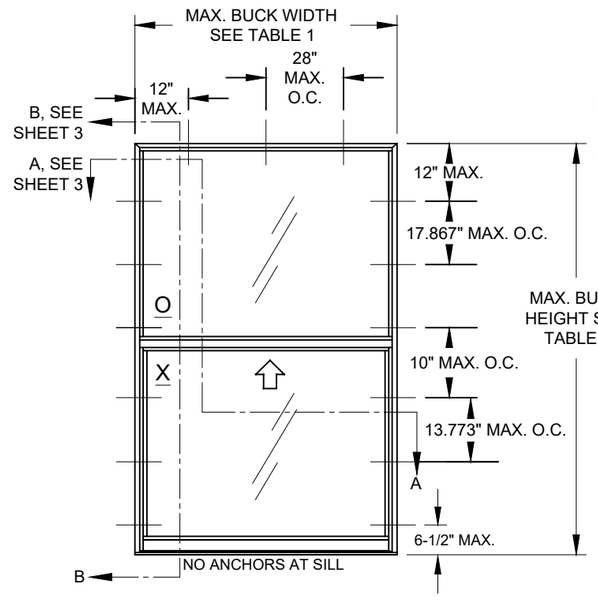

ELEVATION FOR TYP. EQUAL LEG FRAME, EQUAL-LITE CONFIGURATION

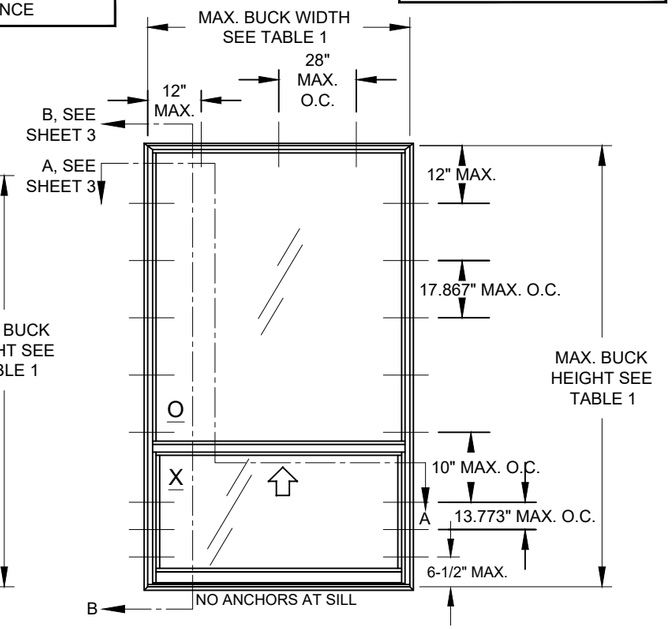

ELEVATION FOR TYP. FLANGE FRAME, PROVIEW/ORIEL CONFIGURATION
(COTTAGE SIMILAR)

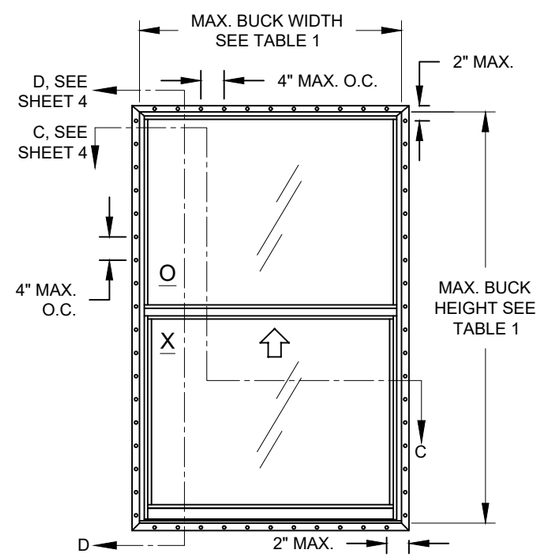

ELEVATION FOR TYP. FIN OR J-CHANNEL FRAME, EQUAL-LITE CONFIGURATION
(SIMILAR ANCHOR DIMENSIONS FOR OTHER CONFIGURATIONS)

SHAPES MAY BE USED BY INSCRIBING THE SHAPE IN A BLOCK AND OBTAINING DESIGN PRESSURES FOR THAT BLOCK SIZE FROM THE TABLE ON THIS SHEET.

Revision:

D) NO CHANGES ON THIS SHEET.

PGT Custom Windows and Doors
1070 TECHNOLOGY DRIVE
N. VENICE, FL 34275
(941) 480-1600

PREPARED BY A. LYNN MILLER
1070 TECHNOLOGY DRIVE
N. VENICE, FL 34275
(941) 480-1600

REGISTRATION #29296

Series	Sheet	DWG No.	Rev.
SH5400	1 OF 4	SH5400FPA-NI	D

Title: VINYL SINGLE HUNG WINDOW (NI)
Desc.: GENERAL NOTES & ELEVATION.
Drawn By: A. MORLESIN
Date: 06/12/11

ANTHONY LYNN MILLER
LICENSE
No. 58705
STATE OF FLORIDA
PROFESSIONAL ENGINEER
10/11/23

A. LYNN MILLER, P.E.
P.E.# 58705

TABLE 2: ANCHORS INSTALLED THROUGH FRAME

Anchor	Substrate	Min. Edge Distance	Min. Embedment
#10 SMS (steel, 18-8 S.S. or 410 S.S.) **Max. DP of 50.0 psf**	P.T. Southern Pine (SG=0.55)	7/16"	1-3/8"
	Steel, A36	3/8"	0.050"
	Steel Stud, A653 Gr. 33	3/8"	0.0346" (20 Ga.)
	Aluminum, 6063-T5	3/8"	0.0713" (14 Ga.)
#12 SMS (steel, 18-8 S.S. or 410 S.S.)	P.T. Southern Pine (SG=0.55)	9/16"	1-3/8"
	Steel, A36	3/8"	0.050"
	Steel Stud, A653 Gr. 33	3/8"	0.0346" (20 Ga.)
	Aluminum, 6063-T5	3/8"	0.0713" (14 Ga.)
3/16" Ultracon+ **Max. DP of 50.0 psf**	P.T. Southern Pine (SG=0.55)	7/16"	1-3/8"
	Concrete (min. 3 ksi)	1"	1-3/8"
	Ungrouted CMU, (ASTM C-90)	1"	1-1/4"
1/4" Ultracon+	P.T. Southern Pine (SG=0.55)	1"	1-3/8"
	Concrete (min. 3 ksi)	1-3/16"	1-3/4"
	Ungrouted CMU, (ASTM C-90)	1"	1-1/4"
1/4" Crete-Flex (410 S.S.)	P.T. Southern Pine (SG=0.55)	1"	1-3/8"
	Concrete (min. 3.35 ksi)	1"	1-3/4"
	Ungrouted CMU, (ASTM C-90)	2-1/2"	1-1/4"
1/4" Aggre-Gator (18-8 S.S.)	Concrete (min. 3.275 ksi)	1-1/2"	1-3/8"
	P.T. Southern Pine (SG=0.55)	1"	1-3/8"
	Ungrouted CMU, (ASTM C-90)	2"	1-1/4"

TABLE 3: ANCHORS INSTALLED THROUGH INTEGRAL FIN

Anchor	Substrate	Min. Edge Distance	Min. Embedment
2-1/2" x .131" Common Nail **Max. DP of 50.0**	P.T. Southern Pine (SG=.55)	9/16"	2-7/16"
2-1/2" x .131" Ring-shank Nail	P.T. Southern Pine (SG=.55)	9/16"	2-7/16"
2-1/2" x .145" Roofing Nail	P.T. Southern Pine (SG=.55)	9/16"	2-7/16"
#10 SMS (steel, 18-8 S.S. or 410 S.S.)	P.T. Southern Pine (SG=.55)	3/4"	1-3/8"
	Aluminum, 6063-T5	3/8"	0.0713" (14 Ga.)
	Steel Stud, Gr. 33	3/8"	0.0346" (20 Ga.)
	Steel, A36	3/8"	0.050"

ANCHOR NOTES FOR TABLES 2 & 3:

1) "UNGROUTED CMU" VALUES MAY BE USED FOR GROUTED CMU APPLICATIONS.

2) ALL ANCHOR HEAD TYPES ARE ACCEPTABLE.

3) ANCHOR LENGTH TO BE SO THAT A MIN. OF 3 THREADS EXTEND BEYOND THE METAL SUBSTRATE.

TABLE 4: REINFORCEMENT TYPES

Reinforcement				
Level	Upper Lite	Lower Lite		
	Bottom Rail	Top Rail	Bottom Rail	Side Rails
R1	B	A	A	A
R2	C	A	A	A
R4	B	A	A	N/A

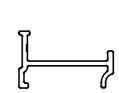

REINFORCEMENT TYPE A

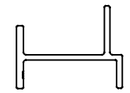

REINFORCEMENT TYPE B

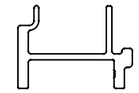

REINFORCEMENT TYPE C

WINDOW SHAPES AS SHOWN BELOW OR SIMILAR, MAY BE USED BY INSCRIBING THE SHAPE IN A BLOCK AND OBTAINING DESIGN PRESSURES AND ANCHORAGE FOR THAT BLOCK SIZE FROM THE TABLE ON SHEET 1.

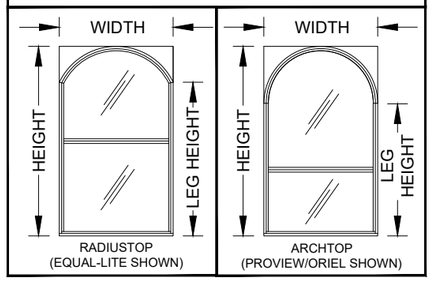

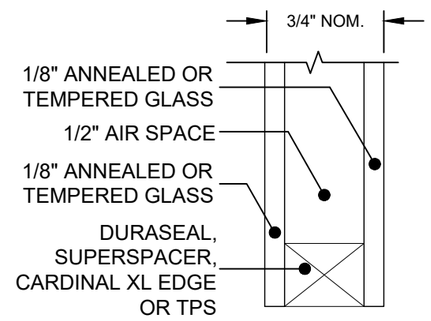

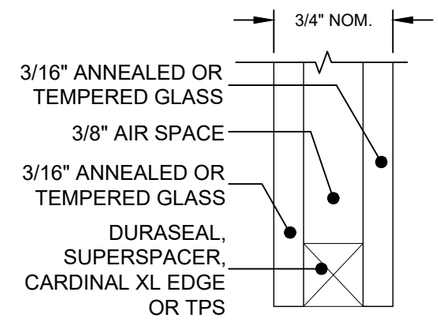

GLASS TYPES

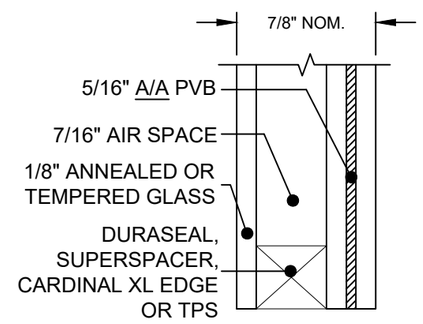

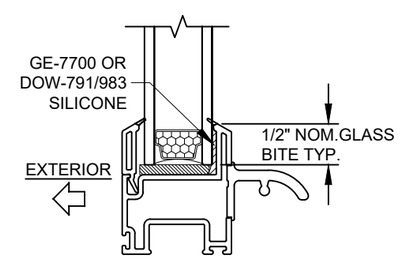

TYP. GLAZING DETAIL

PVB INTERLAYER MANUFACTURED BY KURARAY AMERICA, INC.

Revision:

D) REMOVED ULTRACON 1/4" & 3/6" FROM ANCHOR TABLES.

PREPARED BY A. LYNN MILLER
1070 TECHNOLOGY DRIVE
N. VENICE, FL 34275
(941) 480-1600

REGISTRATION #29296

PGT Custom Windows and Doors
1070 TECHNOLOGY DRIVE
N. VENICE, FL 34275
(941) 480-1600

Series	Desc.	Sheet	DWG No.	Drawn By	Date	Rev.
SH5400	ANCHOR & GLAZING DETAILS.	2 OF 4	SH5400FPA-NI	A. MORLESIN	06/12/11	D

Title: VINYL SINGLE HUNG WINDOW (NI)

ANTHONY LYNN MILLER
LICENSE
No. 58705
STATE OF FLORIDA
PROFESSIONAL ENGINEER
10/11/23

A. LYNN MILLER, P.E.
P.E.# 58705

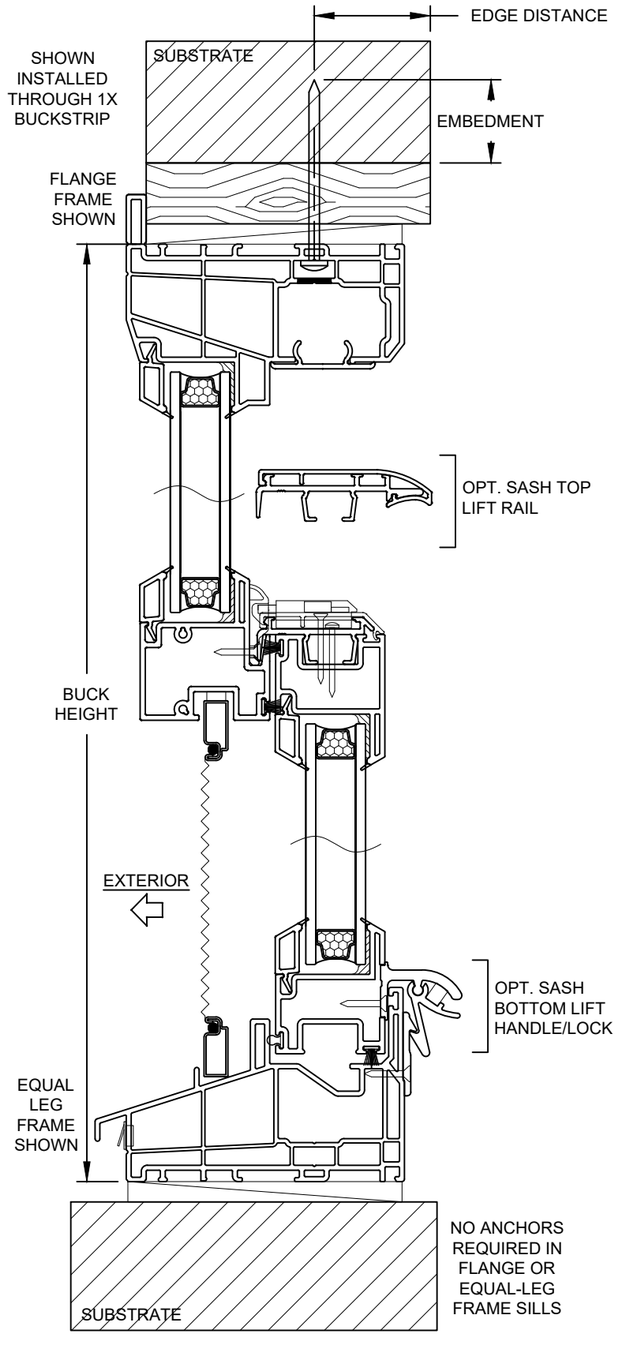

VERTICAL SECTION B-B

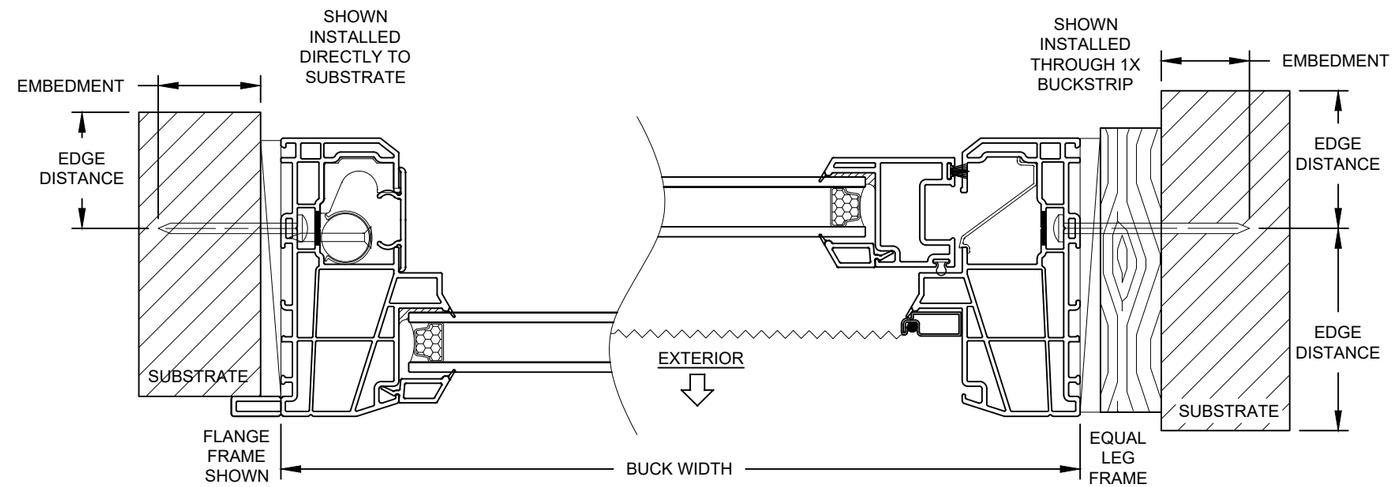

HORIZONTAL SECTION A-A

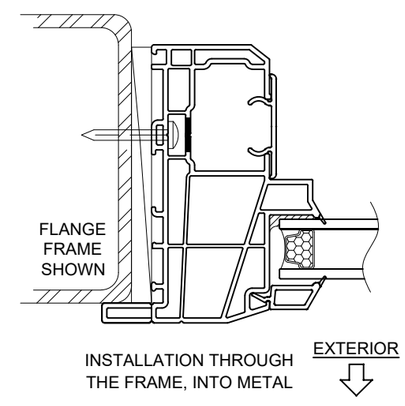

INSTALLATION NOTES:

1) SEE SHEET 1 FOR SPACING REQUIREMENTS.
2) SEE TABLE(S) ON SHEET 2 FOR ANCHORAGE AND SUBSTRATE REQUIREMENTS.
3) MAX. SHIM THICKNESS TO BE 1/4".
4) GLASS SHOWN IS FOR ILLUSTRATIVE PURPOSES ONLY AND MAY DIFFER TO MEET DESIGN REQUIREMENTS.
5) FIN AND/OR FLANGE MAY BE REMOVED TO CREATE OTHER FRAME TYPES.

Revision:

D) NO CHANGES IN THIS SHEET.

PREPARED BY A. LYNN MILLER
1070 TECHNOLOGY DRIVE
N. VENICE, FL 34275
(941) 480-1600

REGISTRATION #29296

PGT Custom Windows and Doors
1070 TECHNOLOGY DRIVE
N. VENICE, FL 34275
(941) 480-1600

Title	VINYL SINGLE HUNG WINDOW (NI)
Desc.	FLANGE INSTALLATIONS.
Drawn By	A. MORLESIN
Date	06/12/11
Rev.	D
DWG No.	SH5400FPA-NI
Sheet	3 OF 4
Series	SH5400

ANTHONY LYNN MILLER
LICENSE
No. 58705
A. Lynn Miller
10/11/23
STATE OF FLORIDA
PROFESSIONAL ENGINEER

A. LYNN MILLER, P.E.
P.E.# 58705

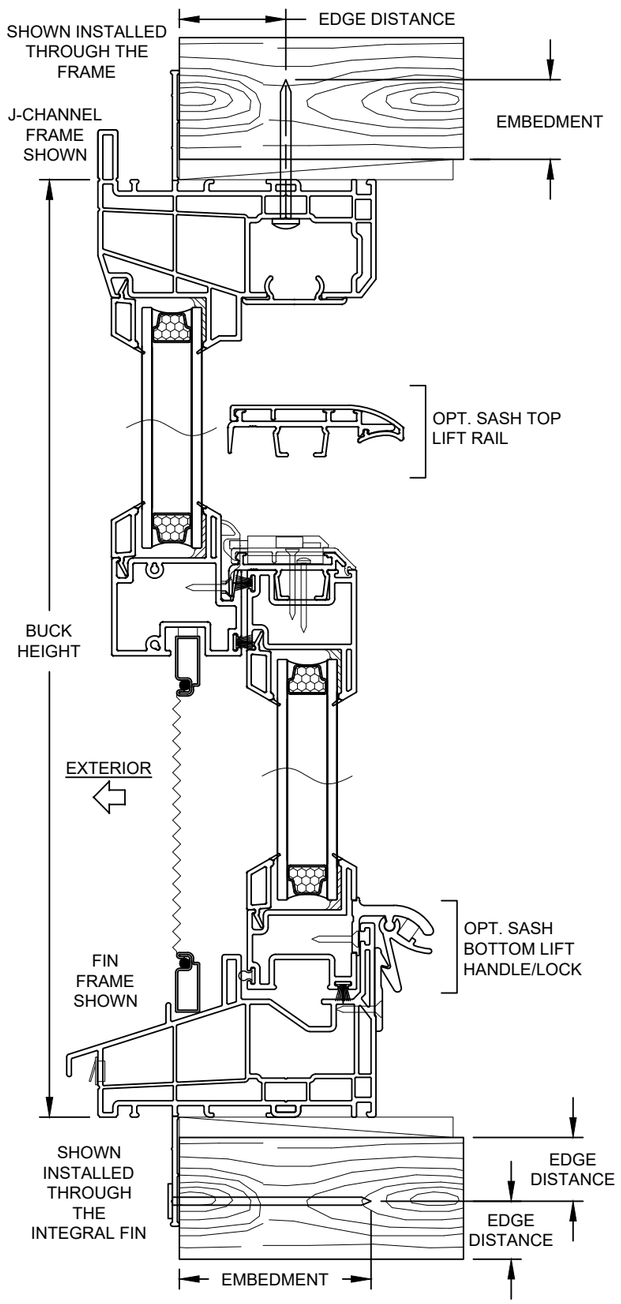

VERTICAL SECTION D-D

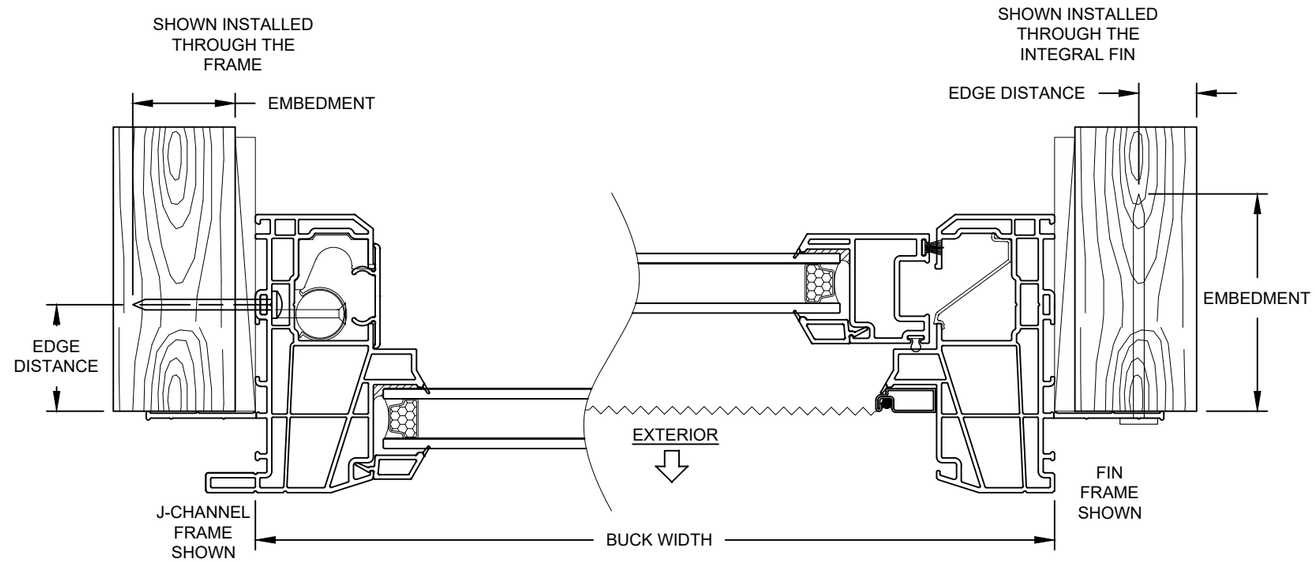

HORIZONTAL SECTION C-C

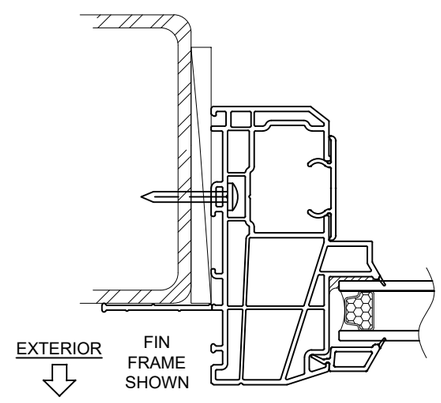

INSTALLATION THROUGH THE FRAME, INTO METAL

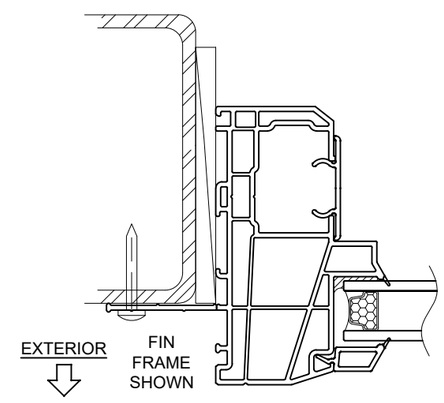

INSTALLATION THROUGH THE INTEGRAL FIN, INTO METAL

INSTALLATION NOTES:

1) SEE SHEET 1 FOR SPACING REQUIREMENTS.
2) SEE TABLE(S) ON SHEET 2 FOR ANCHORAGE AND SUBSTRATE REQUIREMENTS.
3) MAX. SHIM THICKNESS TO BE 1/4".
4) GLASS SHOWN IS FOR ILLUSTRATIVE PURPOSES ONLY AND MAY DIFFER TO MEET DESIGN REQUIREMENTS.
5) FIN AND/OR FLANGE MAY BE REMOVED TO CREATE OTHER FRAME TYPES.

Revision: D) ADD NOTE INSTALL OP. 4

PREPARED BY A. LYNN MILLER
1070 TECHNOLOGY DRIVE
N. VENICE, FL 34275
(941) 480-1600

REGISTRATION #29296

PGT Custom Windows and Doors
1070 TECHNOLOGY DRIVE
N. VENICE, FL 34275
(941) 480-1600

Series	Sheet	DWG No.	Drawn By	Date	Rev.
SH5400	4 OF 4	SH5400FPA-NI	A. MORLESIN	06/12/11	D

Title: VINYL SINGLE HUNG WINDOW (NI)
Desc.: FIN INSTALLATIONS.

ANTHONY LYNN MILLER
LICENSE
No. 58705
STATE OF FLORIDA
PROFESSIONAL ENGINEER
10/11/23

A. LYNN MILLER, P.E.
P.E.# 58705